micro:bit master pin configuration

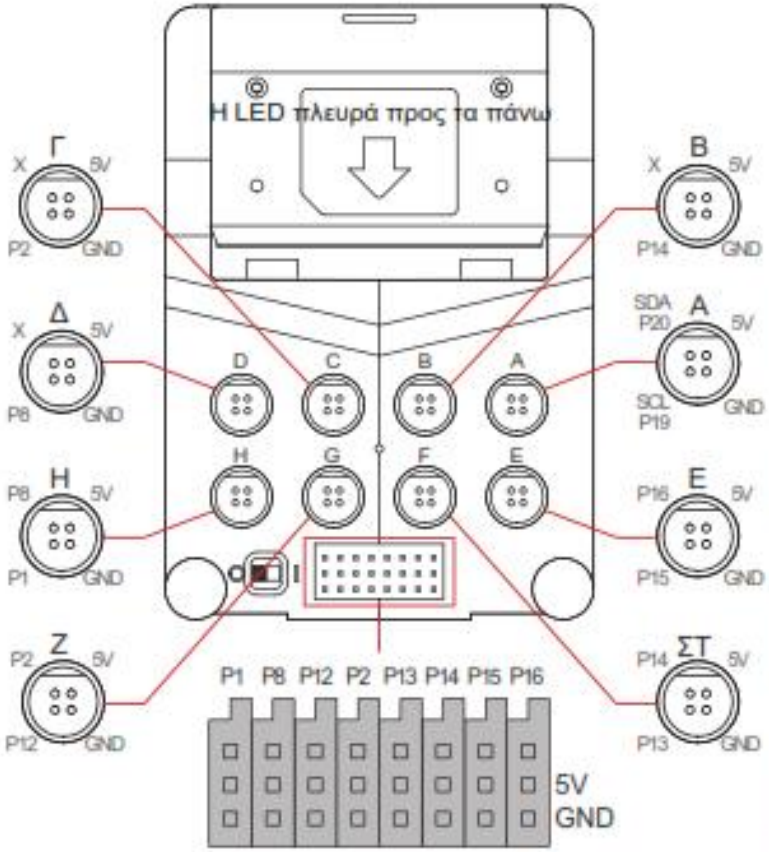

I/O pin configuration diagram
(for female DuPont connectors)

Εξαρτήματα / Gigo / Υποδοχή κουτιού ελέγχου	50X PLANETARY GEARBOX (DDM)	LED HOLDER (4-PIN)	FORCE SENSOR
A	✗	✗	✓
B	✗	✓	✗
Γ	✗	✓	✗
Δ	✗	✓	✗
E	✓	✓	✓
ΣΤ	✓	✓	✓
Z	✓	✓	✓
H	✓	✓	✓